Liteflux LF3XT
Programming Flowchart
CUI – Compact User Interface

Legend
1C – 1 Click
2C = 2 Clicks, etc…
PH = Push & Hold

How to use this Flowchart
1. Always start with the light off or at ***Start Here.***.
2. If you are lost in the programming tree, a couple of series of 3 Clicks will exit without saving anything.
3. To Save a setting, Click 3 times and PH.
4. Get familiar with CUI before programming FUI
5. When the light changes modes or remembers a setting it will blink twice.
6. I suggest finding the option you want to set then work backwards until you get back to a root mode.

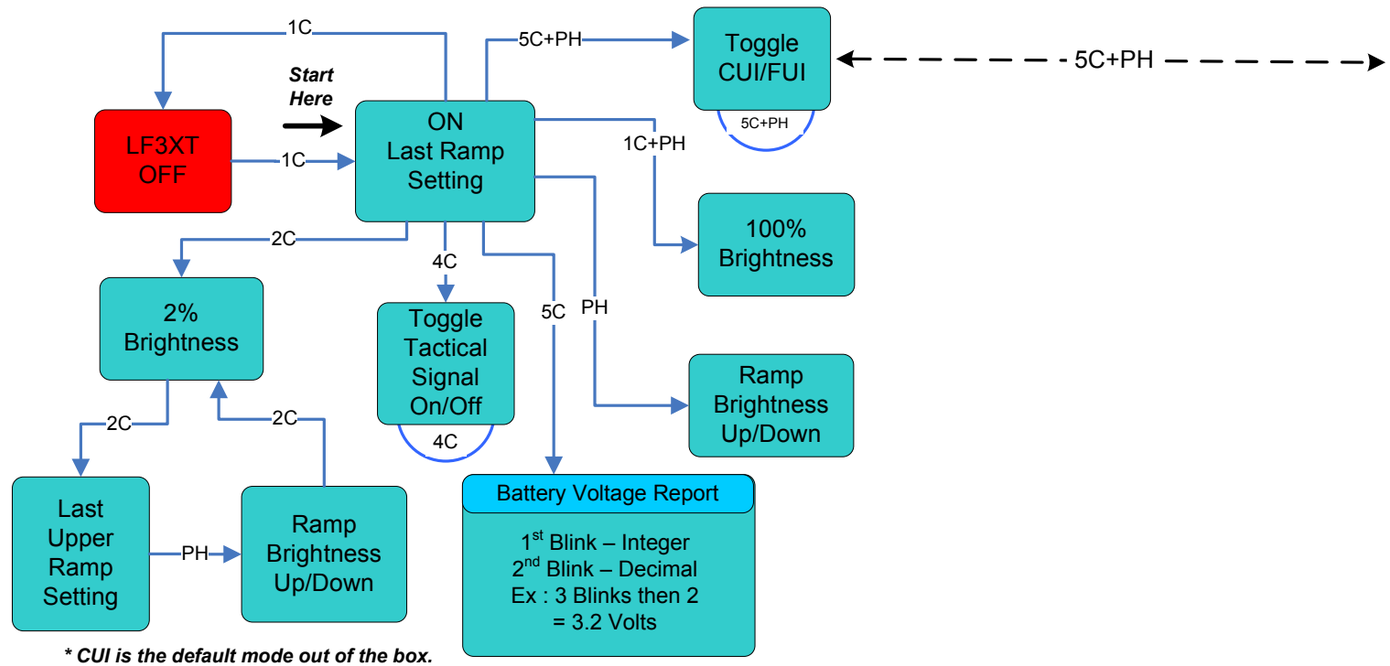

**** CUI is the default mode out of the box.***

CPF Member – Budman231
Version 1.5

Liteflux LF3XT
Programming Flowchart

FUI – Full Function User Interface

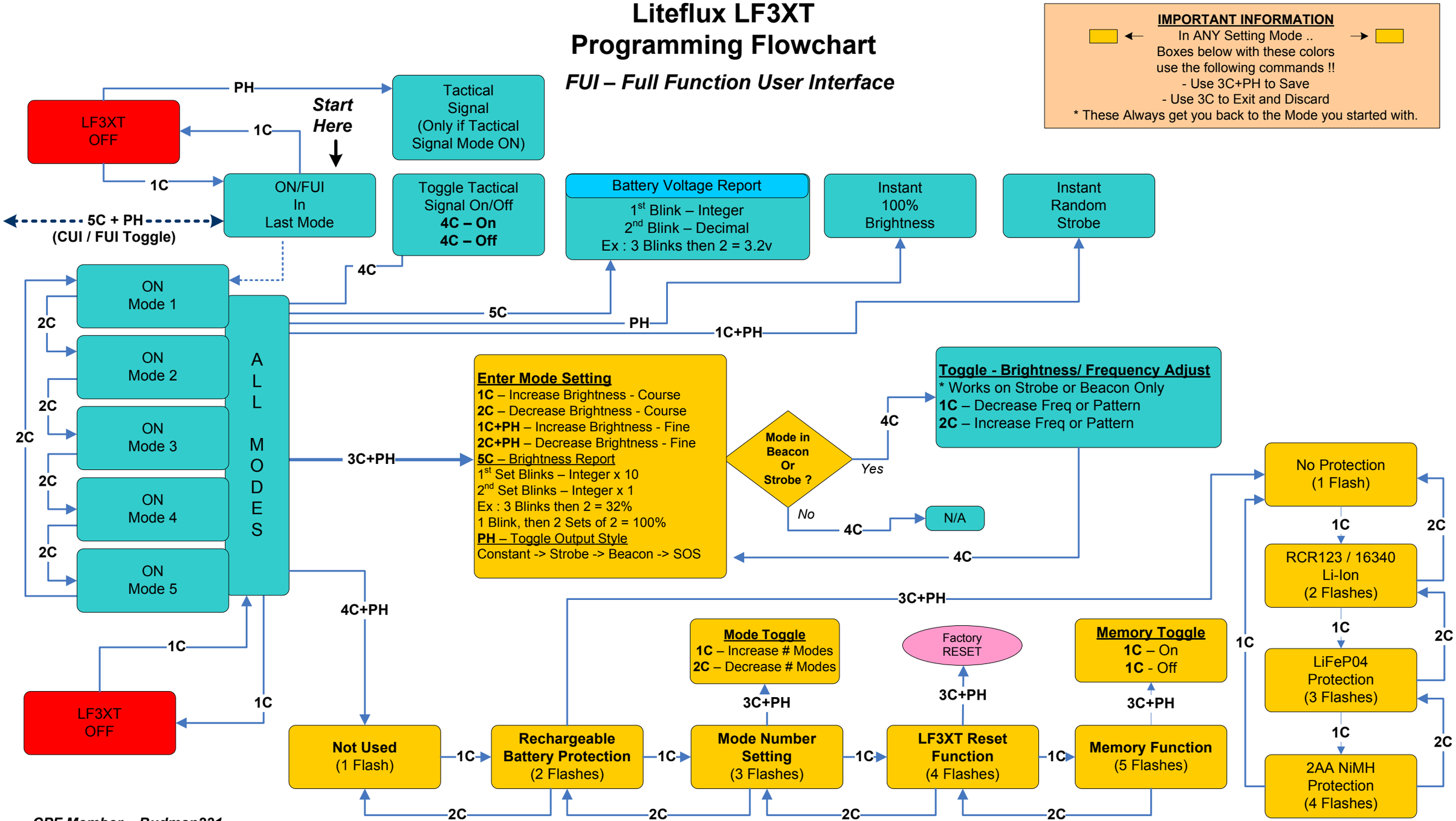

CPF Member – Budman231
Version 1.5